DEGSON ELECTRONICS CO., LTD.

Product Specification

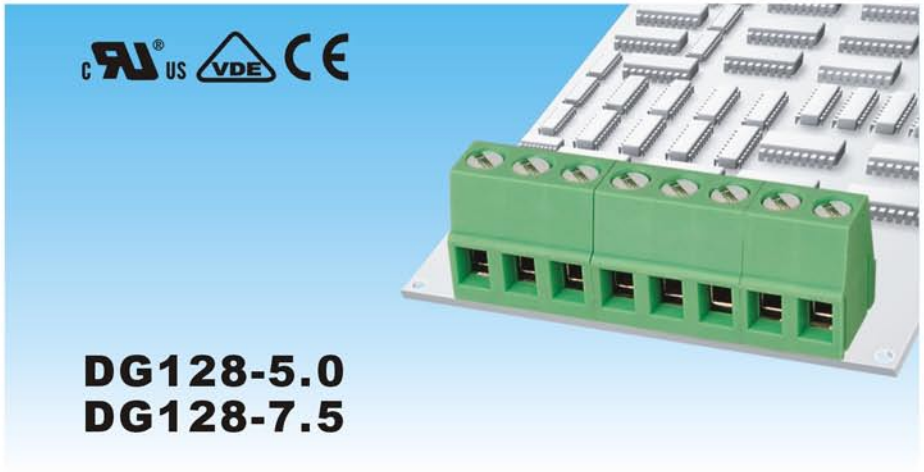

Material		
Screws	:	M2.5 steel Zinc plated
Pin header	:	Brass，Tin plated
Housing	:	PA66，UL94V-0
Electrical		
Rated voltage	:	300V
Rated current	:	10A
Contact resistance	:	20mΩ
Insulation resistance	:	5000MΩ/DC1000V
Withstanding voltage	:	AC2000V/1Min
Wire range	:	24-12AWG 2.5mm²
Mechanical		
Temp.Range	:	-40°C~+105°C
Torque	:	0.4Nm(3.6lb.in)
Strip length	:	6-7mm

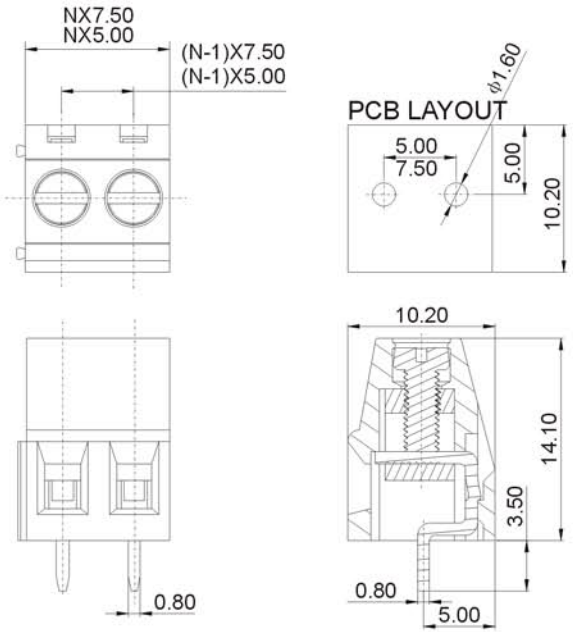

HOW TO ORDER:

[ ] - [ ] [ ] P - 1 [ ] - [X] [X] [X]

Customer Request

Series No. No of Pole Color

1	Gray	4	Green	7	Trans-parent
2	Blue	5	Orange	8	Yellow
3	Black	6	Red	9	White

MM (INCH)	DEGSON ELECTRONICS CO., LTD.
THIRD ANGLE PROJECTION	NAME DG128-5.0 DG128-7.5