ProLight Opto
Technology Corporation

**Collimators for Proeon Series**
**Technical Datasheet**
**Version: 2.4**

## Features

- High Efficiency
- RoHS compliant
- Works with ProLight Proeon Series

## Typical Applications

- Lamp
- Reading lights
- Architectural lighting
- Street lights
- Decoration lights
- Down lights

## Collimators List

| Collimator Size | Collimator P/N | Matched Holder P/N | White / Warm White LED | | | |
|---|---|---|---|---|---|---|
| | | | View angle ($2\theta_{0.3}$) | Beam angle ($2\theta_{0.5}$) | On axis efficiency (cd/lm) | X* |
| 20mm | PG1C-NX17 | PG1C-SX17 | 20° | 15° | 10.20 | 35.6 |
| | PG1C-NX36 | PG1N-SO02 | 35° | 25° | 3.65 | 12.7 |
| | PG1N-NX43 | PG1N-SO02 | 45° | 35° | 1.55 | 5.3 |
| | PG1C-NX43 | PG1C-SX43 | 55° | 45° | 2.15 | 7.4 |
| | PG1N-NX45 | PG1N-SO02 | 60° | 45° | 0.85 | 3.0 |
| | PM2A-NXVA | PM2A-SXV1 | 25° × 45° | 15° × 35° | 4.15 | 14.5 |
| | PM2B-NX25-AW | | 25 | 19 | 6.00 | 20.7 |
| | PM2B-NX35-AW | | 35 | 25 | 3.40 | 11.9 |
| | PM2B-NX45-AW | | 45 | 35 | 2.95 | 10.3 |
| | PM2B-NX55-AW | | 55 | 40 | 1.85 | 6.5 |
| 35mm | PM6A-FN20 | | 25° | 18° | 4.95 | 17.2 |
| | PM6A-FN25 | | 35° | 25° | 2.90 | 10.1 |
| 76mm | PG1C-6A20-AW | | 23° | 17° | 8.55 | 29.9 |
| | PG1C-6A30-AW | | 30° | 23° | 5.65 | 19.7 |
| 95mm | PG1C-9B30-AW | | 30° | 23° | 4.55 | 15.8 |
| | PG1C-9B60-AW | | 75° | 60° | 0.90 | 3.1 |

Notes:
1. The typical angle varies with LED due to different color chip and chip position tolerance.
2. The view angle **($2\theta_{0.3}$ is similar to the image by eye view)** is the full angle measured where the luminous intensity is 30% of the peak value.
3. The beam angle ($2\theta_{0.5}$) is the full angle measured where the luminous intensity is 50% of the peak value.

* X is the value that measurement of the on-axis lux of LED with lens divided by lux of LED

## General Characteristics:

| | |
|---|---|
| Lens Material | Optical Grade PMMA |
| Holder Material | PC or ABS |
| Operating Temperature Range | -40 °C to +70 °C |
| Storage Temperature Range | -40 °C to +70 °C |

## Usage and Maintenance:

1. Clean collimators with mild soap and water and a soft cloth.
2. Do not use any commercial cleaning solvents on collimators, like alcohol.
3. Please handle or install collimators with wearing gloves, skin oils may damage collimators or optical characteristic.

## Mechanical Dimensions and Illuminance Chart

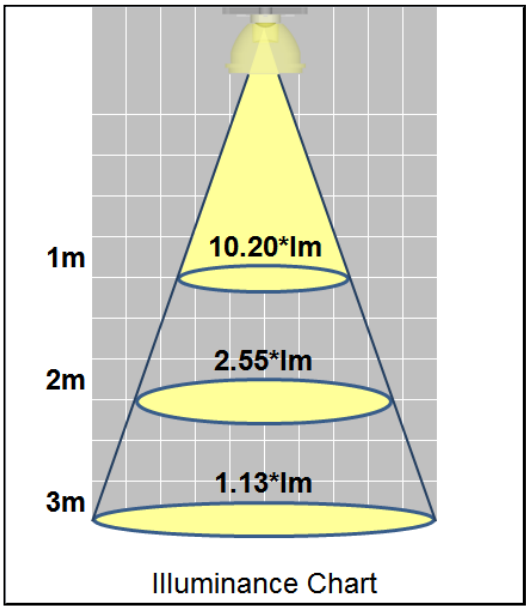


Collimator P/N：PG1C-NX17
View angle ($2\theta_{0.3}$)：20°
Beam angle ($2\theta_{0.5}$)：15°

Matched Holder P/N：PG1C-SX17

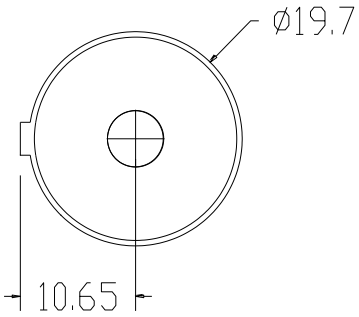


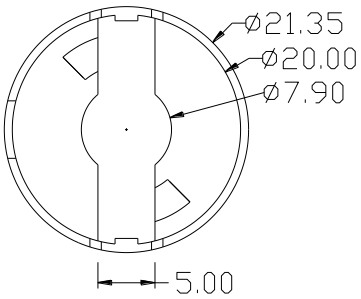


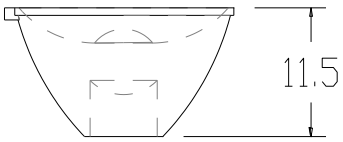


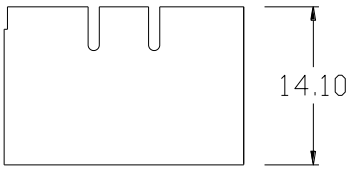


Notes:
1. Tolerance is ±0.20 mm.
2. Do not subject to temperatures greater than 70˚C as plastic deformation may occur.
   Protect collimator against exposure to solvents and adhesives that are not compatible with it.
   Use care in handling the optic to avoid scratches or other damage that will effect the optical performance.
3. All dimensions in millimeters.
4. Drawing not to scale.

*The appearance and specifications of the product may be modified for improvement without notice.

## Mechanical Dimensions and Illuminance Chart

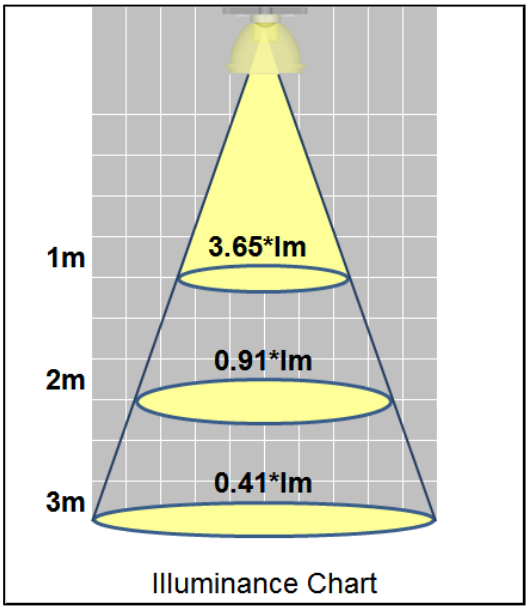


Collimator P/N：PG1C-NX36
View angle ($2\theta_{0.3}$)：35°
Beam angle ($2\theta_{0.5}$)：25°

Matched Holder P/N：PG1N-SO02

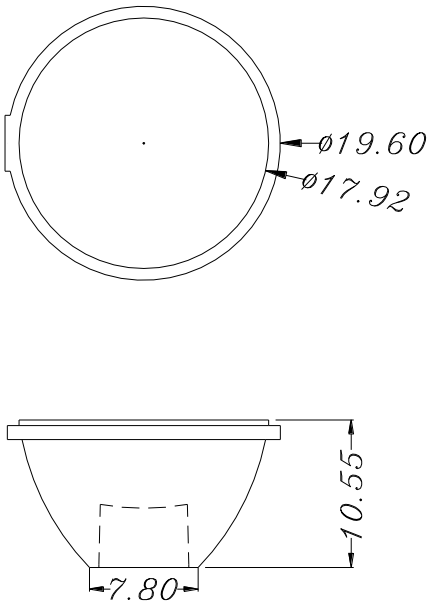


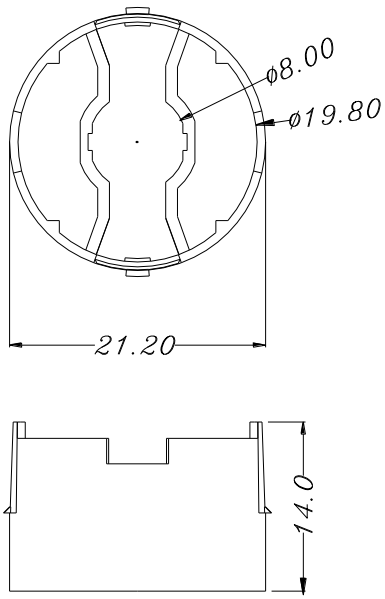


Notes:
1. Tolerance is ±0.20 mm.
2. Do not subject to temperatures greater than 70˚C as plastic deformation may occur.
   Protect collimator against exposure to solvents and adhesives that are not compatible with it.
   Use care in handling the optic to avoid scratches or other damage that will effect the optical performance.
3. All dimensions in millimeters.
4. Drawing not to scale.

*The appearance and specifications of the product may be modified for improvement without notice.

## Mechanical Dimensions and Illuminance Chart

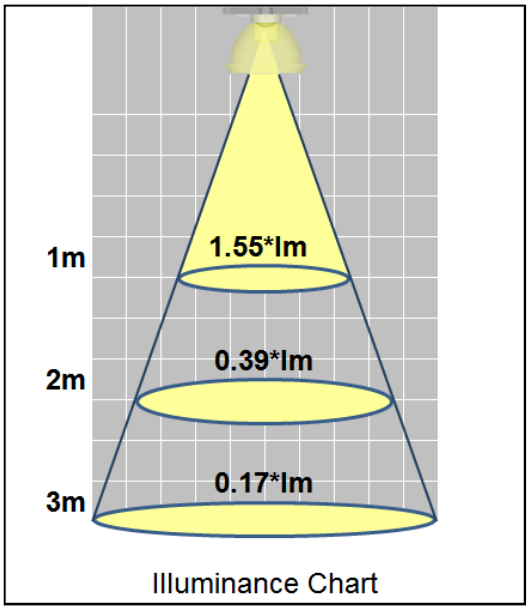


Collimator P/N：PG1N-NX43
View angle ($2\theta_{0.3}$)：45°
Beam angle ($2\theta_{0.5}$)：35°

Matched Holder P/N：PG1N-SO02

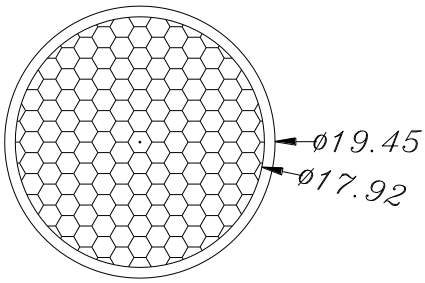


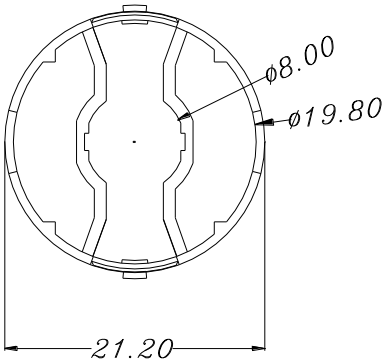


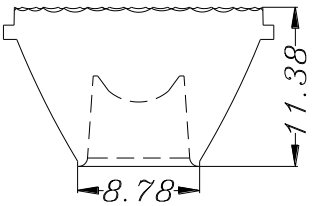


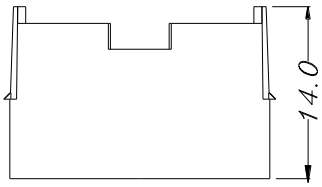


Notes:
1. Tolerance is ±0.20 mm.
2. Do not subject to temperatures greater than 70˚C as plastic deformation may occur.
   Protect collimator against exposure to solvents and adhesives that are not compatible with it.
   Use care in handling the optic to avoid scratches or other damage that will effect the optical performance.
3. All dimensions in millimeters.
4. Drawing not to scale.

*The appearance and specifications of the product may be modified for improvement without notice.

## Mechanical Dimensions and Illuminance Chart

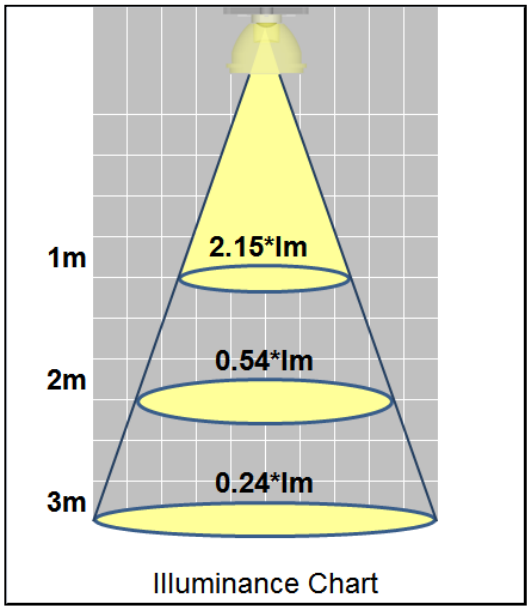


Collimator P/N：PG1C-NX43
View angle ($2\theta_{0.3}$)：55°
Beam angle ($2\theta_{0.5}$)：45°

Matched Holder P/N：PG1C-SX43

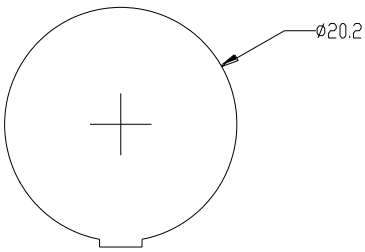


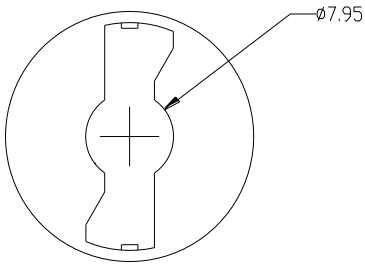


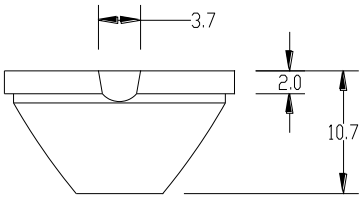


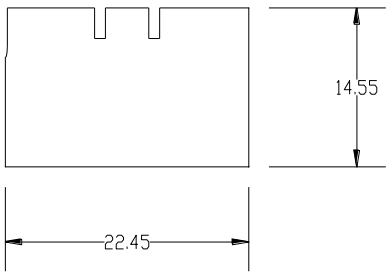


Notes:
1. Tolerance is ±0.20 mm.
2. Do not subject to temperatures greater than 70˚C as plastic deformation may occur.
   Protect collimator against exposure to solvents and adhesives that are not compatible with it.
   Use care in handling the optic to avoid scratches or other damage that will effect the optical performance.
3. All dimensions in millimeters.
4. Drawing not to scale.

*The appearance and specifications of the product may be modified for improvement without notice.

## Mechanical Dimensions and Illuminance Chart

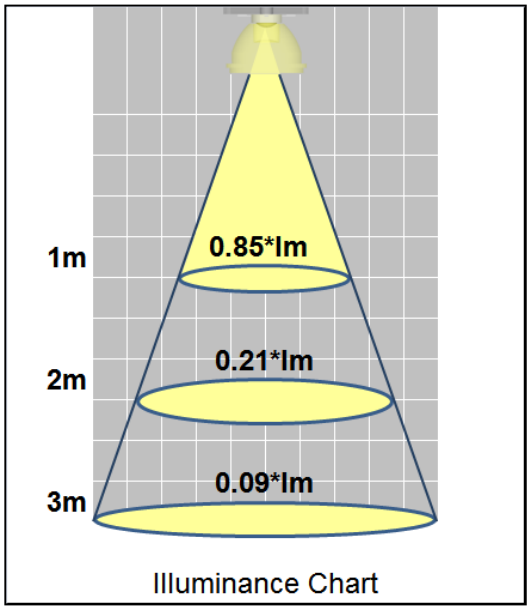


Collimator P/N：PG1N-NX45
View angle ($2\theta_{0.3}$)：60°
Beam angle ($2\theta_{0.5}$)：45°

Matched Holder P/N：PG1N-SO02

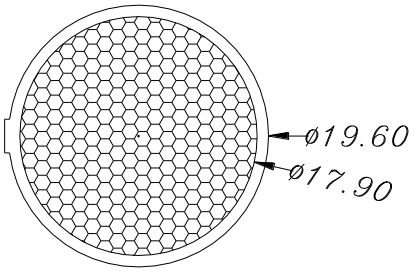


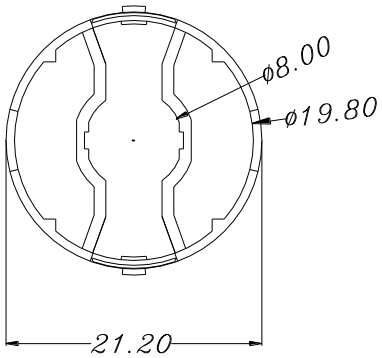


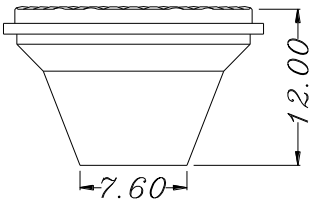


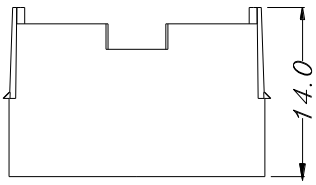


Notes:
1. Tolerance is ±0.20 mm.
2. Do not subject to temperatures greater than 70˚C as plastic deformation may occur.
   Protect collimator against exposure to solvents and adhesives that are not compatible with it.
   Use care in handling the optic to avoid scratches or other damage that will effect the optical performance.
3. All dimensions in millimeters.
4. Drawing not to scale.

*The appearance and specifications of the product may be modified for improvement without notice.

## Mechanical Dimensions and Illuminance Chart

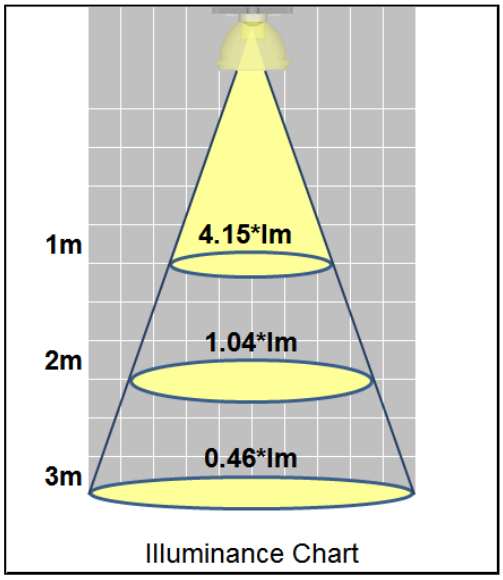


Collimator P/N：PM2A-NXVA
View angle ($2\theta_{0.3}$)：25° × 45°
Beam angle ($2\theta_{0.5}$)：15° × 35°

Matched Holder P/N：PM2A-SXV1

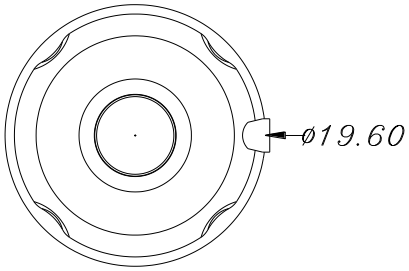


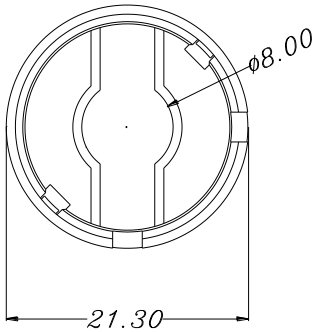


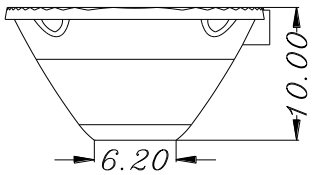


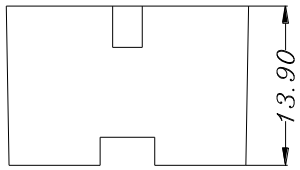


Notes:
1. Tolerance is ±0.20 mm.
2. Do not subject to temperatures greater than 70˚C as plastic deformation may occur.
   Protect collimator against exposure to solvents and adhesives that are not compatible with it.
   Use care in handling the optic to avoid scratches or other damage that will effect the optical performance.
3. All dimensions in millimeters.
4. Drawing not to scale.

*The appearance and specifications of the product may be modified for improvement without notice.

## Mechanical Dimensions and Illuminance Chart

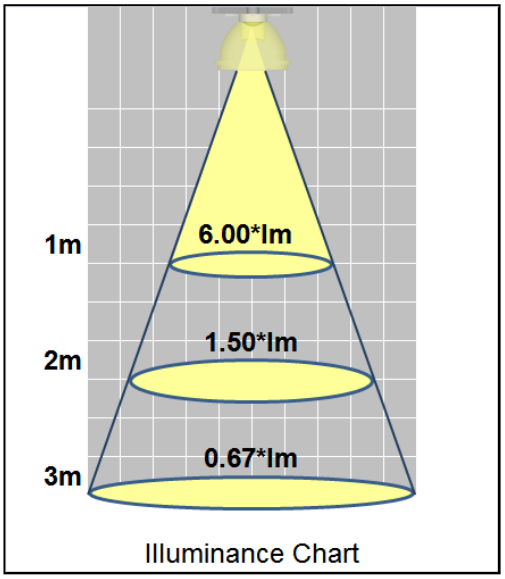


Collimator P/N：PM2B-NX25-AW
View angle ($2\theta_{0.3}$)：25°
Beam angle ($2\theta_{0.5}$)：19°

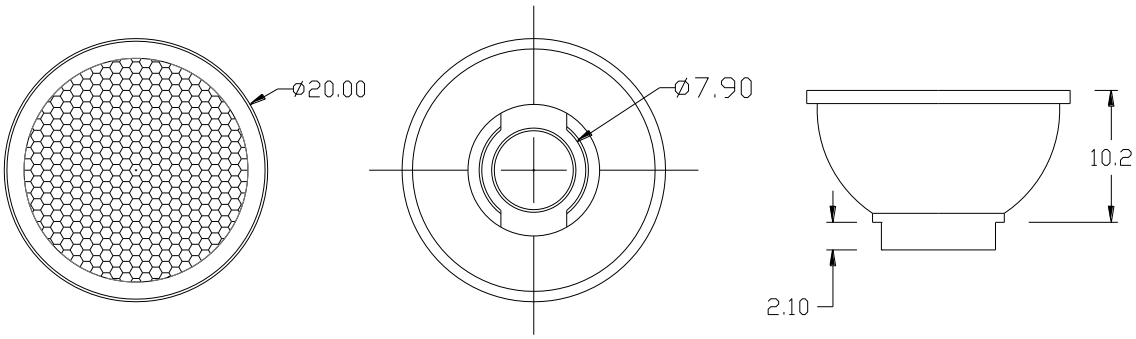


Notes:
1. Tolerance is ±0.20 mm.
2. Do not subject to temperatures greater than 70˚C as plastic deformation may occur.
   Protect collimator against exposure to solvents and adhesives that are not compatible with it.
   Use care in handling the optic to avoid scratches or other damage that will effect the optical performance.
3. All dimensions in millimeters.
4. Drawing not to scale.

*The appearance and specifications of the product may be modified for improvement without notice.

## Mechanical Dimensions and Illuminance Chart

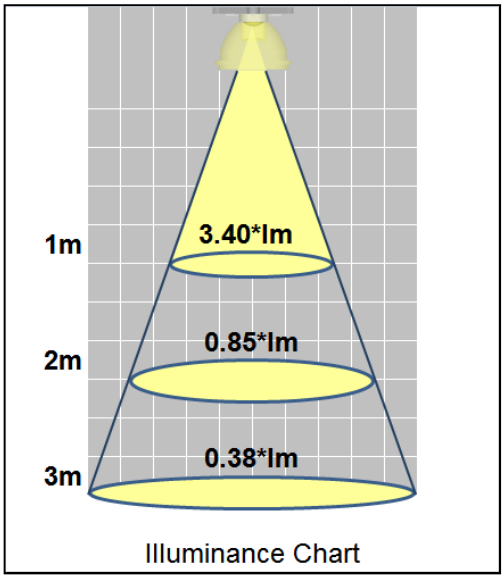


Collimator P/N：PM2B-NX35-AW
View angle ($2\theta_{0.3}$)：35°
Beam angle ($2\theta_{0.5}$)：25°

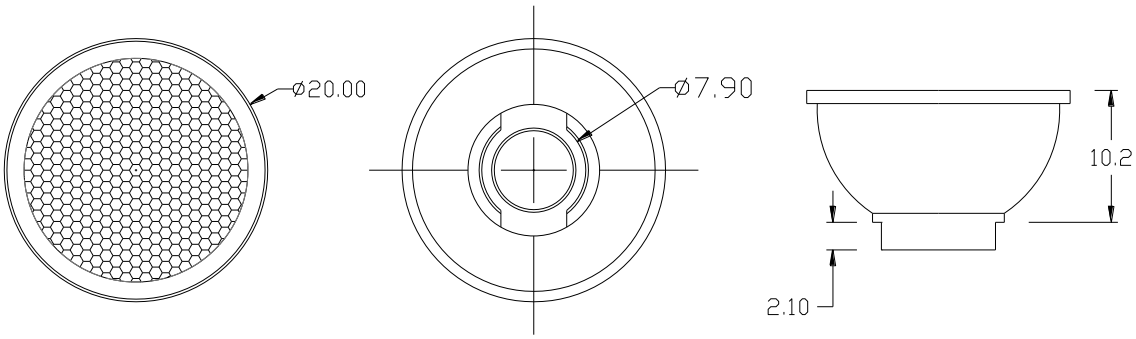


Notes:
1. Tolerance is ±0.20 mm.
2. Do not subject to temperatures greater than 70˚C as plastic deformation may occur.
   Protect collimator against exposure to solvents and adhesives that are not compatible with it.
   Use care in handling the optic to avoid scratches or other damage that will effect the optical performance.
3. All dimensions in millimeters.
4. Drawing not to scale.

*The appearance and specifications of the product may be modified for improvement without notice.

## Mechanical Dimensions and Illuminance Chart

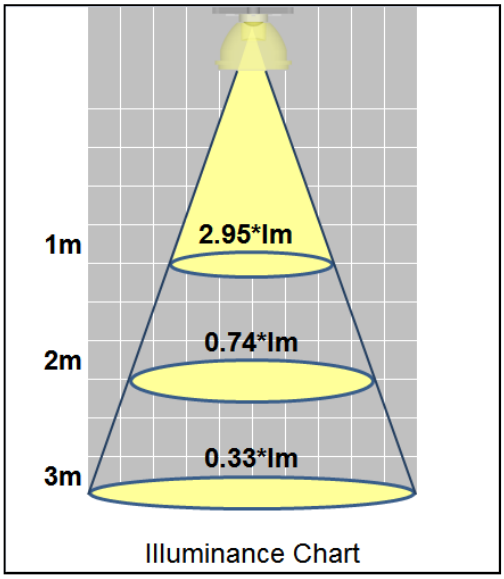


Collimator P/N：PM2B-NX45-AW
View angle ($2\theta_{0.3}$)：45°
Beam angle ($2\theta_{0.5}$)：35°

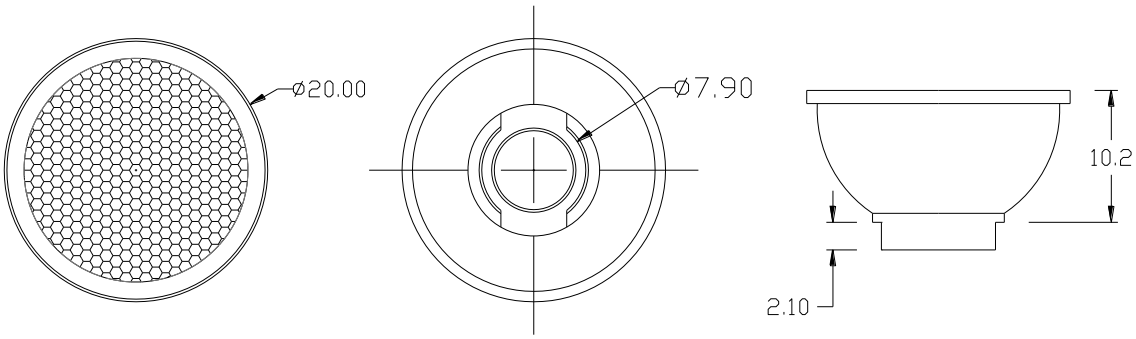


Notes:
1. Tolerance is ±0.20 mm.
2. Do not subject to temperatures greater than 70˚C as plastic deformation may occur.
   Protect collimator against exposure to solvents and adhesives that are not compatible with it.
   Use care in handling the optic to avoid scratches or other damage that will effect the optical performance.
3. All dimensions in millimeters.
4. Drawing not to scale.

*The appearance and specifications of the product may be modified for improvement without notice.

## Mechanical Dimensions and Illuminance Chart

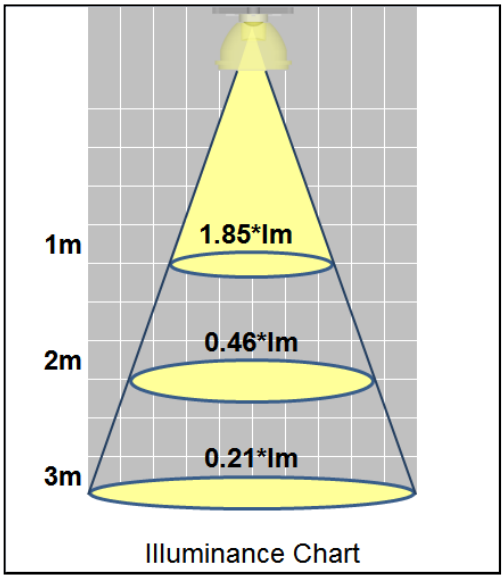


Collimator P/N：PM2B-NX55-AW
View angle ($2\theta_{0.3}$)：55°
Beam angle ($2\theta_{0.5}$)：40°

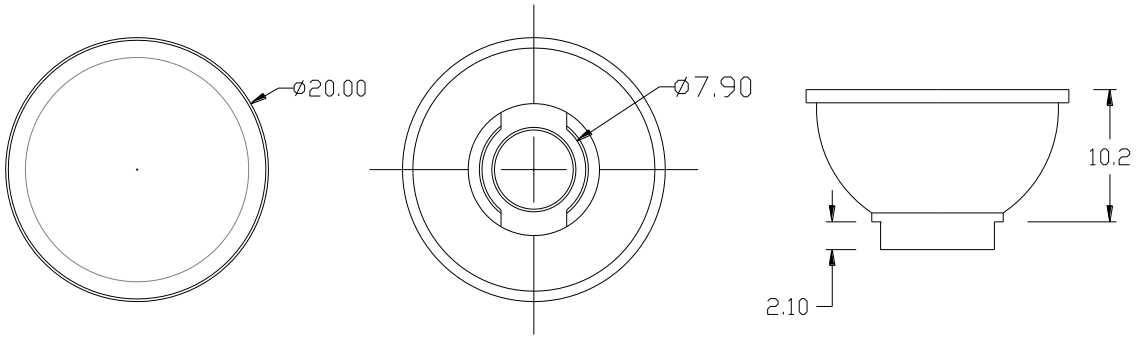


Notes:
1. Tolerance is ±0.20 mm.
2. Do not subject to temperatures greater than 70˚C as plastic deformation may occur.
   Protect collimator against exposure to solvents and adhesives that are not compatible with it.
   Use care in handling the optic to avoid scratches or other damage that will effect the optical performance.
3. All dimensions in millimeters.
4. Drawing not to scale.

*The appearance and specifications of the product may be modified for improvement without notice.

## Mechanical Dimensions and Illuminance Chart

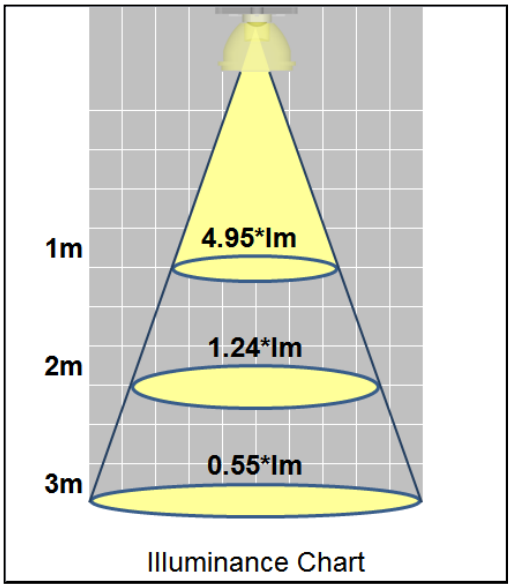


Collimator P/N：PM6A-FN20
View angle ($2\theta_{0.3}$)：25°
Beam angle ($2\theta_{0.5}$)：18°

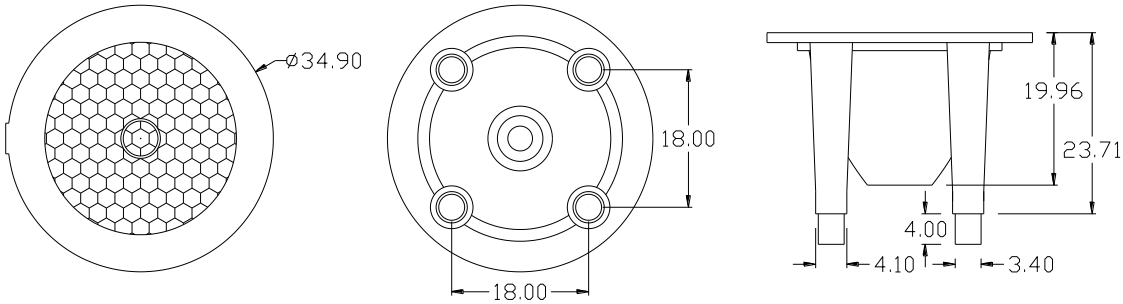


Notes:
1. Tolerance is ±0.20 mm.
2. Do not subject to temperatures greater than 70˚C as plastic deformation may occur.
   Protect collimator against exposure to solvents and adhesives that are not compatible with it.
   Use care in handling the optic to avoid scratches or other damage that will effect the optical performance.
3. All dimensions in millimeters.
4. Drawing not to scale.

*The appearance and specifications of the product may be modified for improvement without notice.

## Mechanical Dimensions and Illuminance Chart

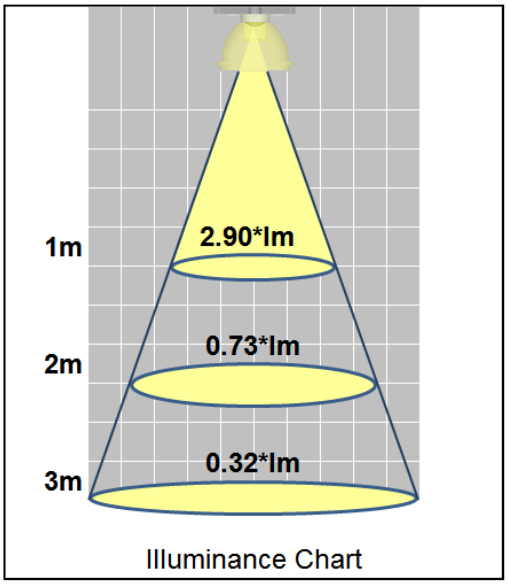


Collimator P/N：PM6A-FN25
View angle ($2\theta_{0.3}$)：35°
Beam angle ($2\theta_{0.5}$)：25°

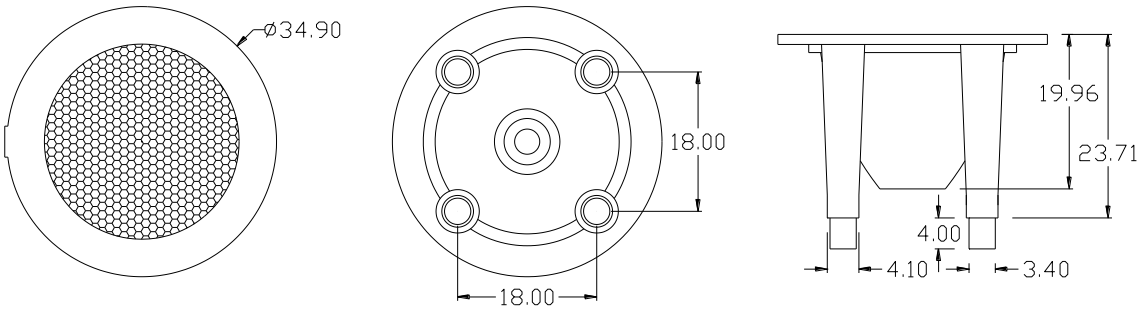


Notes:
1. Tolerance is ±0.20 mm.
2. Do not subject to temperatures greater than 70˚C as plastic deformation may occur.
   Protect collimator against exposure to solvents and adhesives that are not compatible with it.
   Use care in handling the optic to avoid scratches or other damage that will effect the optical performance.
3. All dimensions in millimeters.
4. Drawing not to scale.

*The appearance and specifications of the product may be modified for improvement without notice.

## Mechanical Dimensions and Illuminance Chart

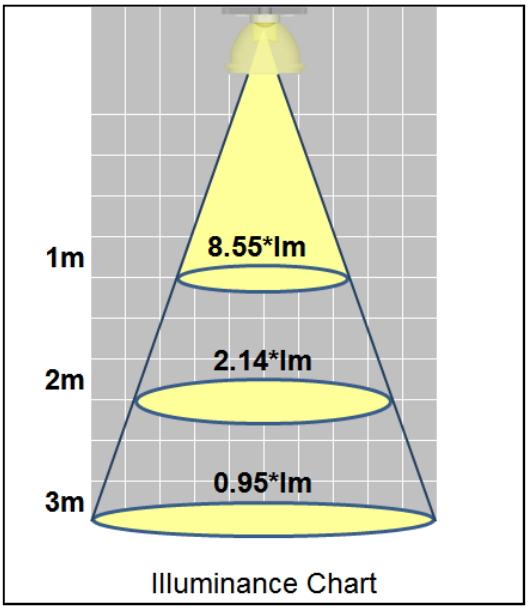


Collimator P/N：PG1C-6A20-AW
View angle ($2\theta_{0.3}$)：23°
Beam angle ($2\theta_{0.5}$)：17°

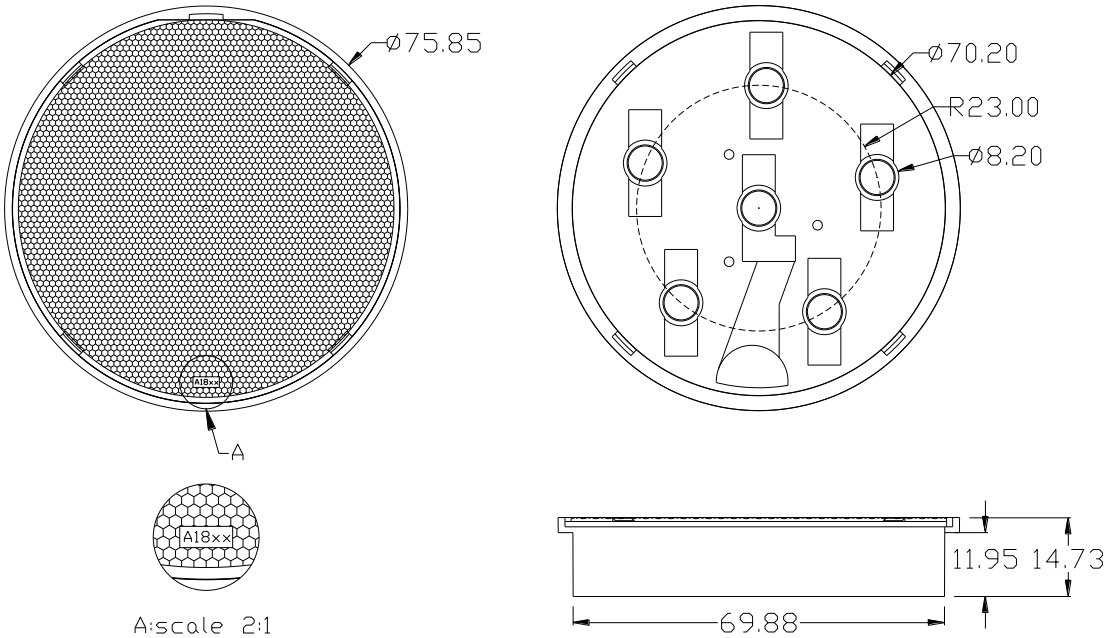


Notes:
1. Tolerance is ±0.20 mm.
2. Do not subject to temperatures greater than 70˚C as plastic deformation may occur.
   Protect collimator against exposure to solvents and adhesives that are not compatible with it.
   Use care in handling the optic to avoid scratches or other damage that will effect the optical performance.
3. All dimensions in millimeters.
4. Drawing not to scale.

*The appearance and specifications of the product may be modified for improvement without notice.

## Mechanical Dimensions and Illuminance Chart

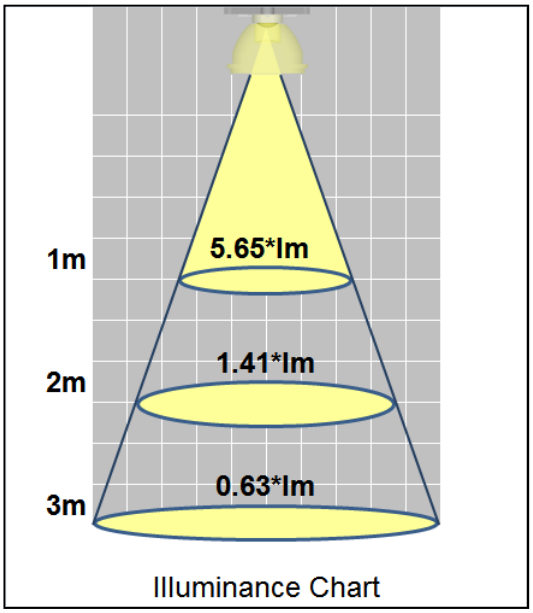


Collimator P/N：PG1C-6A30-AW
View angle ($2\theta_{0.3}$)：30°
Beam angle ($2\theta_{0.5}$)：23°

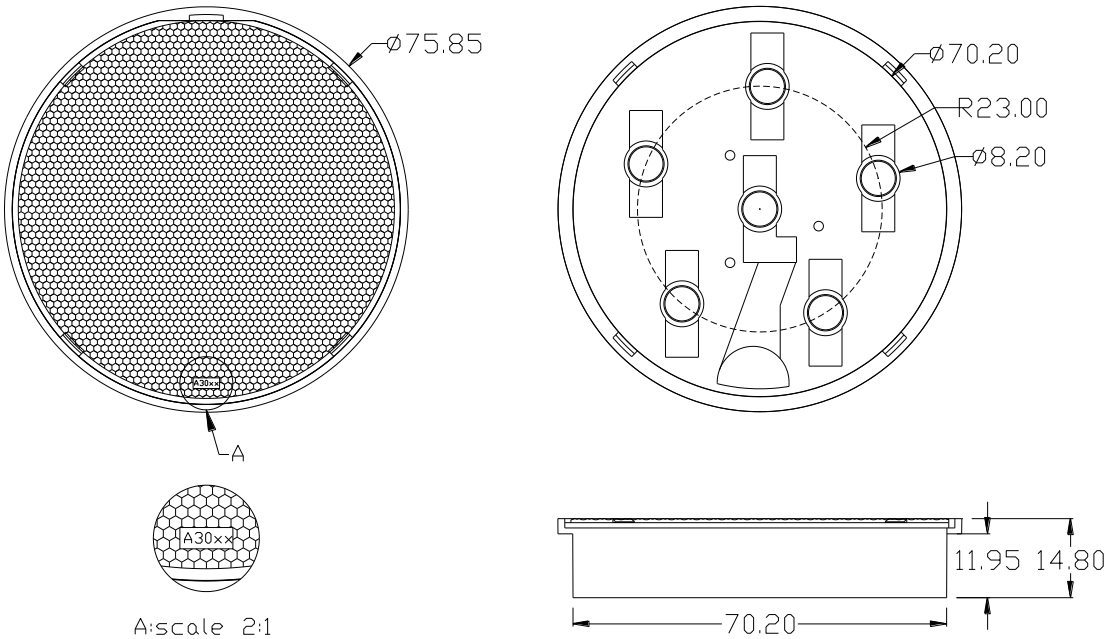


Notes:
1. Tolerance is ±0.20 mm.
2. Do not subject to temperatures greater than 70˚C as plastic deformation may occur.
   Protect collimator against exposure to solvents and adhesives that are not compatible with it.
   Use care in handling the optic to avoid scratches or other damage that will effect the optical performance.
3. All dimensions in millimeters.
4. Drawing not to scale.

*The appearance and specifications of the product may be modified for improvement without notice.

## Mechanical Dimensions and Illuminance Chart

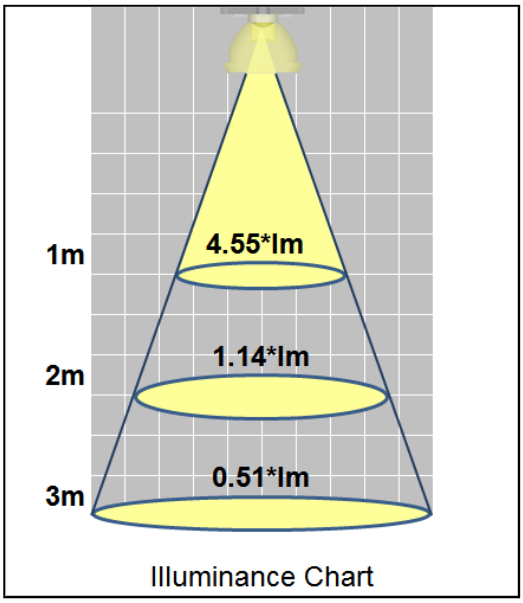


Collimator P/N：PG1C-9B30-AW
View angle ($2\theta_{0.3}$)：30°
Beam angle ($2\theta_{0.5}$)：23°

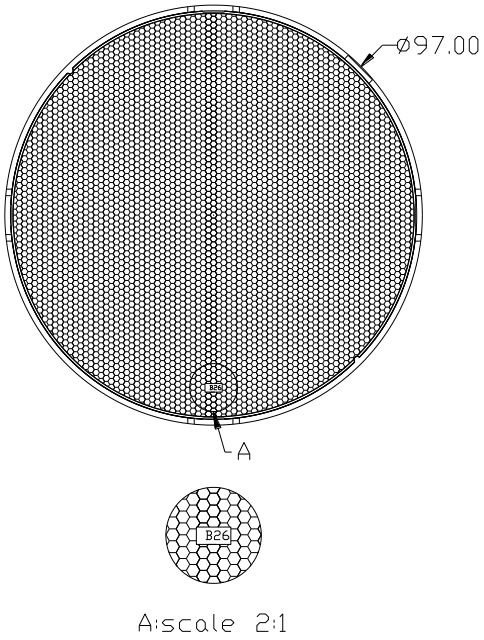


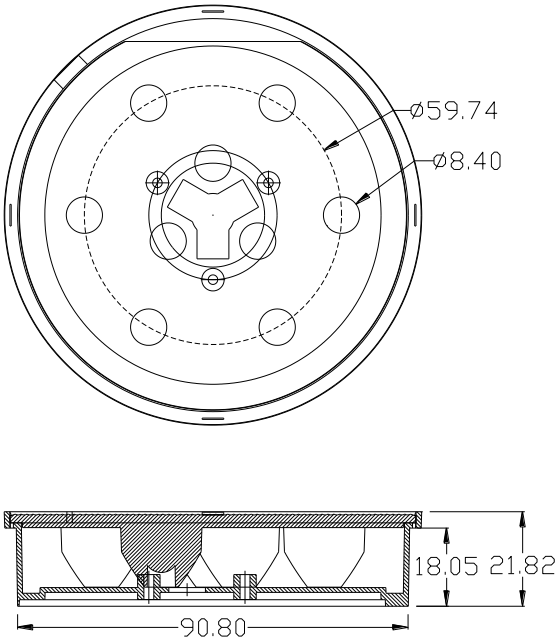


Notes:
1. Tolerance is ±0.20 mm.
2. Do not subject to temperatures greater than 70˚C as plastic deformation may occur.
   Protect collimator against exposure to solvents and adhesives that are not compatible with it.
   Use care in handling the optic to avoid scratches or other damage that will effect the optical performance.
3. All dimensions in millimeters.
4. Drawing not to scale.

*The appearance and specifications of the product may be modified for improvement without notice.

## Mechanical Dimensions and Illuminance Chart

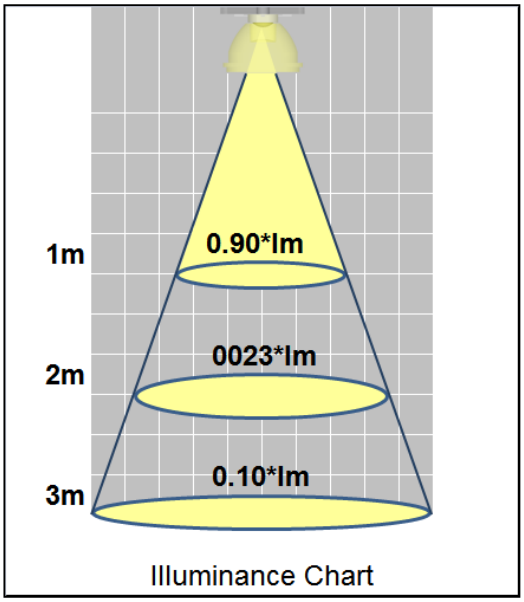


Collimator P/N：PG1C-9B60-AW
View angle ($2\theta_{0.3}$)：75°
Beam angle ($2\theta_{0.5}$)：60°

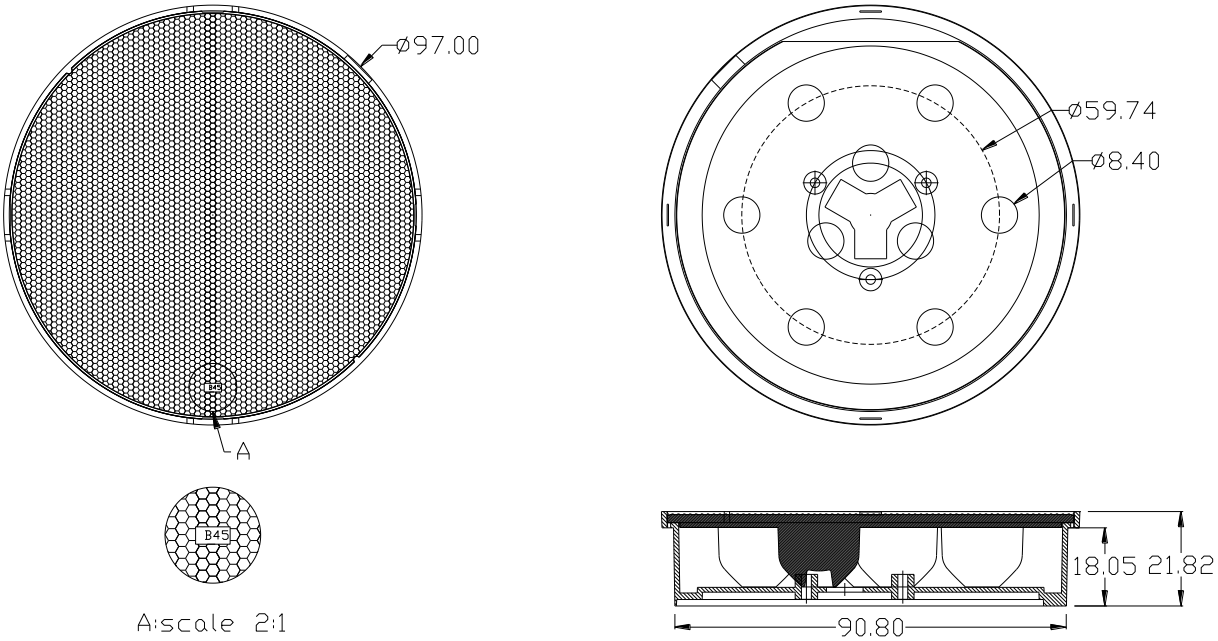


Notes:
1. Tolerance is ±0.20 mm.
2. Do not subject to temperatures greater than 70˚C as plastic deformation may occur.
   Protect collimator against exposure to solvents and adhesives that are not compatible with it.
   Use care in handling the optic to avoid scratches or other damage that will effect the optical performance.
3. All dimensions in millimeters.
4. Drawing not to scale.

*The appearance and specifications of the product may be modified for improvement without notice.